ASSEMBLY INSTRUCTIONS

FOR

1988 - 1996 CHEVROLET C-4 CORVETTE*

***For additional vehicle compatibility, visit www.wilwood.com**

SUPERLITE 6R/ST FRONT ROAD RACE BRAKE KIT WITH FLEXLINES AND 12.88” DIAMETER VENTED ROTOR

BASE PART NUMBER

140-16094

DISC BRAKES SHOULD ONLY BE INSTALLED BY SOMEONE EXPERIENCED AND COMPETENT IN THE INSTALLATION AND MAINTENANCE OF DISC BRAKES

READ ALL WARNINGS

WARNING

IT IS THE RESPONSIBILITY OF THE PERSON INSTALLING ANY BRAKE COMPONENT OR KIT TO DETERMINE THE SUITABILITY OF THE COMPONENT OR KIT FOR THAT PARTICULAR APPLICATION. IF YOU ARE NOT SURE HOW TO SAFELY USE THIS BRAKE COMPONENT OR KIT, YOU SHOULD NOT INSTALL OR USE IT. DO NOT ASSUME ANYTHING. IMPROPERLY INSTALLED OR MAINTAINED BRAKES ARE DANGEROUS. IF YOU ARE NOT SURE, GET HELP OR RETURN THE PRODUCT. YOU MAY OBTAIN ADDITIONAL INFORMATION AND TECHNICAL SUPPORT BY CALLING WILWOOD AT (805) 388-1188, OR VISIT OUR WEB SITE AT WWW.WILWOOD.COM. USE OF WILWOOD TECHNICAL SUPPORT DOES NOT GUARANTEE PROPER INSTALLATION. **YOU**, OR THE PERSON WHO DOES THE INSTALLATION MUST KNOW HOW TO PROPERLY USE THIS PRODUCT. IT IS NOT POSSIBLE OVER THE PHONE TO UNDERSTAND OR FORESEE ALL THE ISSUES THAT MIGHT ARISE IN YOUR INSTALLATION.

RACING EQUIPMENT AND BRAKES MUST BE MAINTAINED AND SHOULD BE CHECKED REGULARLY FOR FATIGUE, DAMAGE, AND WEAR.

Need Additional Information? Use Your SmartPhone and Jump to Our Technical Tips Section on Our Web Site.

WARNING

DO NOT OPERATE ANY VEHICLE ON UNTESTED BRAKES!

SEE MINIMUM TEST PROCEDURE WITHIN

ALWAYS UTILIZE SAFETY RESTRAINT SYSTEMS AND ALL OTHER AVAILABLE SAFETY EQUIPMENT WHILE OPERATING THE VEHICLE

IMPORTANT • READ THE DISCLAIMER OF WARRANTY INCLUDED IN THE KIT

NOTE: Some cleaners may stain or remove the finish on brake system components. Test the cleaner on a hidden portion of the component before general use.

Important Notice - Read This First

Before any tear-down or disassembly begins, review the following information:

- **Review the wheel clearance diagram (figure 2, page 3) to verify that there is adequate clearance with the wheels you will be using with the installation.**
- **Due to OEM production differences and other variations from vehicle to vehicle, the fastener hardware and other components in this kit may not be suitable for a specific application or vehicle.**
- **It is the responsibility of the purchaser and installer of this kit to verify suitability / fitment of all components and ensure all fasteners and hardware achieve complete and proper engagement. Improper or inadequate engagement can lead to component failure.**

Photographic Tip

Important and highly recommended: Take photos of brake system before disassembly and during the disassembly process. In the event, trouble-shooting photos can be life savers. Many vehicles have undocumented variations, photos will make it much simpler for Wilwood to assist you if you have a problem.

Exploded Assembly Diagram

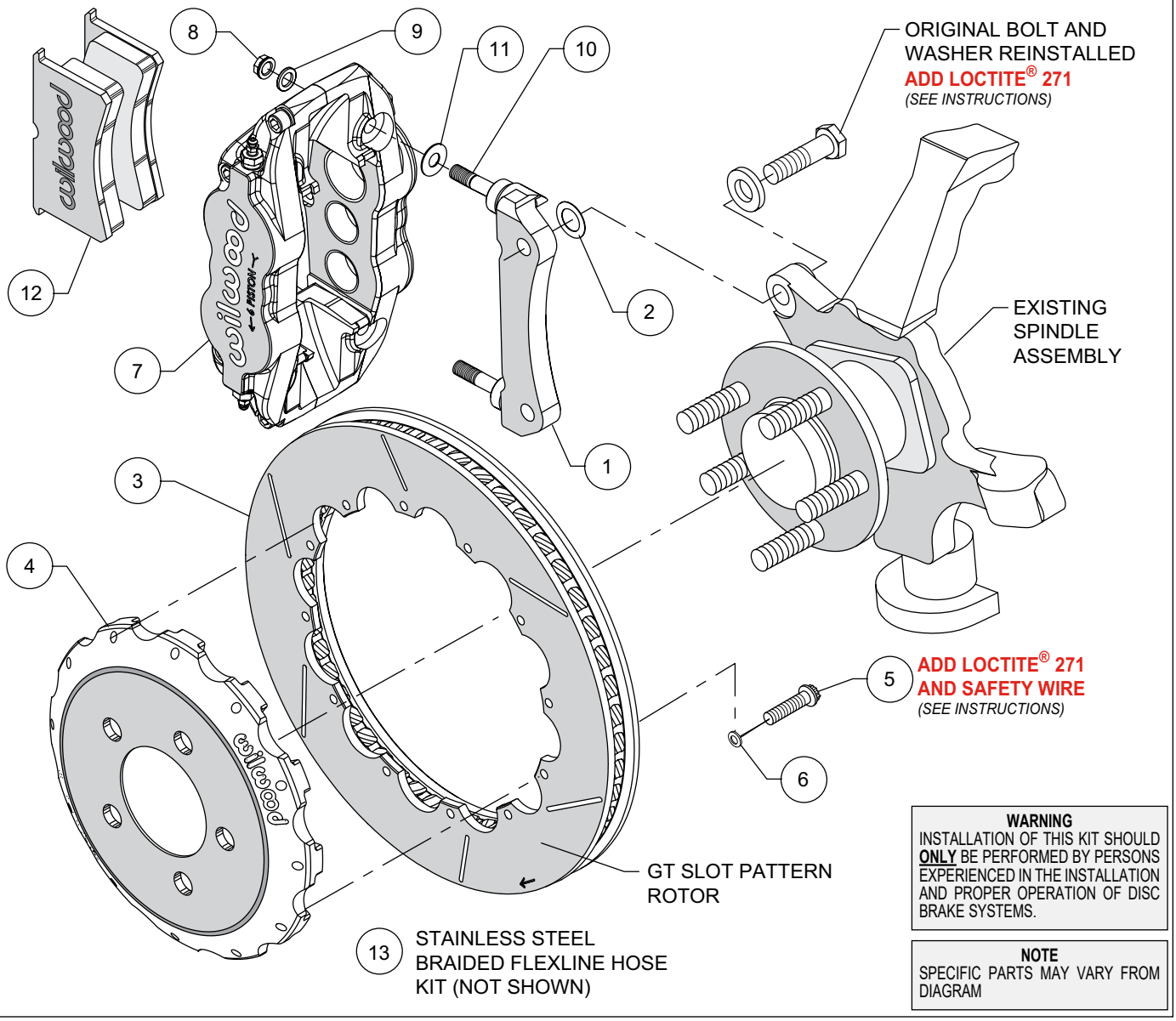

Figure 1. Typical Installation Configuration

Parts List

ITEM NO.	PART NO.	DESCRIPTION	QTY
1	250-8518	Bracket, Caliper Mounting	2
2	240-8127	Shim, .015 Thick	12
3	160-12961/62	GT Rotor - 1.10” x 12.88” Dia, 12 x 8.75” Bolt Circle (one each, right and left)	2
4	170-6837	Hat	2
5	230-6737	Bolt, 1/4-20 x 1.00” Long, 12 Point	24
6	240-11240	Washer, .265” I.D. x .500” O.D. x .063” Thick	24
7	120-16053/54	Caliper, Superlite 6R/ST	2
8	230-16550	Nut, 3/8-24 Self-Locking, 6 Point	4
9	240-10190	Washer, .391” I.D. x .625” O.D. x .063” Thick	4
10	230-9078	Stud, 3/8-16 x 3/8-24 x 2.50” long (pre installed in bracket)	4
11	240-1159	Shim, .035” Thick	16
12	150-14772K	Pad, BP-30 Compound, Axle Set	1
13	220-8338	Braided Stainless Steel Flexline Hose Kit (not shown)	1

NOTES:
Part Number 230-4572 Rotor Bolt Kit, includes part numbers 230-6737 and 240-11240
Part Number 250-8519 Caliper Bracket Mounting Bolt Kit, includes P/N 230-16550, 230-9078, 240-1159, 240-10190, 240-8127 & 250-8518

General Information and Disassembly Instructions

- *Installation of this kit should **ONLY** be performed by persons experienced in the installation and proper operation of disc brake systems.* Before assembling this Wilwood disc brake kit, double check the following to ensure a trouble free installation.

- Inspect the contents of this kit against the parts list to ensure that all components and hardware are included.

- Make sure this is the correct kit to fit the exact make and model year of your vehicle. This kit is designed for direct bolt-on installation to 1988 through 1996 model year Chevrolet C4 Corvette axle hubs.

- Verify your wheel clearance using Figure 2.

- Verify that the factory axle hub center register diameter and lug pattern match those in the new hat. ***NOTE:** Axle hubs that have been modified with different size studs or lug patterns may require modifications to the new hat that must be performed by a qualified machinist.*

- ***WARNING:** Brake pads included in this kit are intended for high temperature race use only.* Extended use at low temperature can cause accelerated rotor and pad wear. Please see the associated components list on the last page of this data sheet for alternative brake pad compounds for other uses.

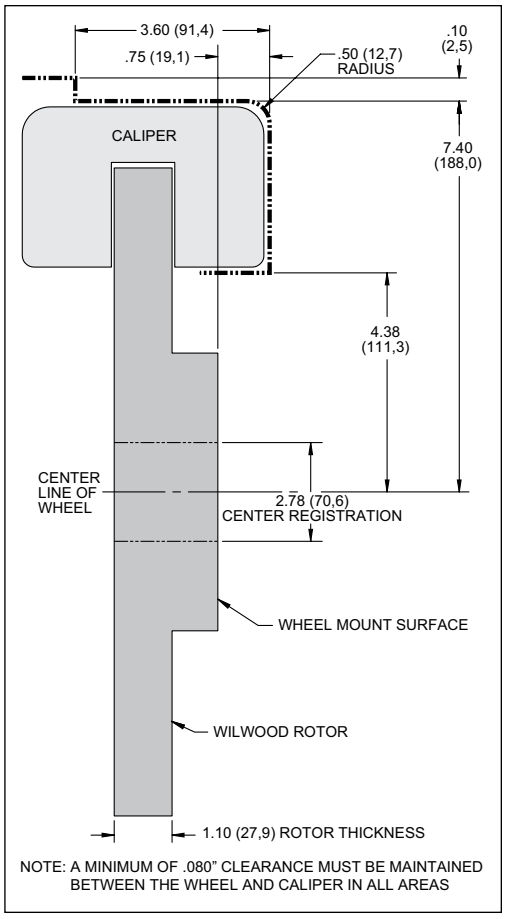

Figure 2. Wheel Clearance Diagram

Disassembly

- Disassemble the original equipment front brakes:

  Raise the front wheels off the ground and support the front suspension according to the vehicle manufacturer’s instructions.

  Remove the front wheels, calipers, rotors, and dust shields. Save the stock caliper mounting bracket bolts and washers, they will be utilized during reassembly.

- Remove any nicks or burrs on the axle hub and upright that may interfere with the installation of the new brake components.

- Clean and de-grease the axle hub, upright assembly and saved components.

Assembly Instructions

Assembly Instructions (numbers in parenthesis refer to the parts list and Figure 1 on the preceding pages):

- The caliper mount bracket (1) should initially be installed with clean, dry threads on the mounting bolts. Orient the bracket as shown in Figure 1, and install using saved OEM bolts and washers. Initially place one .015 thick shim (2) on each bolt between the bracket and upright, Figure 1. Temporarily tighten the mounting bolts. ***NOTE:*** *The bracket must fit squarely against the mount bosses on the upright.* Inspect for interference from casting irregularities, machining ridges, burrs, etc. Later, after the caliper alignment has been checked, the mount bolts will be secured using red *Loctite*® 271.

- Orient the rotor (3) and the hat (4) as shown in Figure 1. Attach rotor to hat using bolts (5) and washers (6). Apply red *Loctite*® 271 to the bolt threads and torque to 155 **in-lb** using a criss-cross pattern. Safety wire bolts using standard 0.032 inch diameter stainless steel safety wire as shown in Figure 3. Please refer to Wilwood's data sheet DS-386 (available at www.wilwood.com/Pdf/DataSheets/ds386.pdf) for complete safety wire installation instructions.

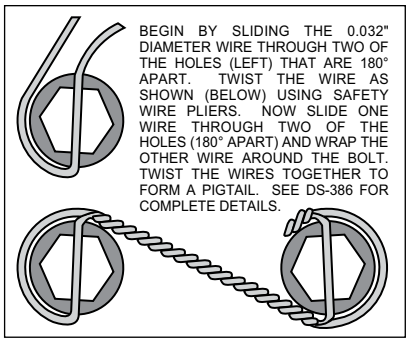

Figure 3. Safety Wire Diagram

- Slide the hat/rotor assembly (4 and 3) onto the axle hub. ***NOTE:*** *The hat must fit flush against the axle hub flange or excessive rotor run out may result.* Install three lug nuts (finger tight) to keep the hat/rotor assembly in place while continuing with the installation.

- ***NOTE:*** *This kit contains distinct right and left hand calipers that must be mounted in a specific direction, as described below.* Initially place one .035" thick shim (11) on each stud (10) as shown in Figure 1. Mount the caliper (7) onto the bracket (1) using lock nuts (8) and washers (9), Figure 1. Ensure that the caliper is mounted so that the largest pistons are at the rotor exit end of the caliper, in relation to the direction of rotor rotation. Temporarily tighten the lock nuts and view the rotor through the top opening of the caliper. The rotor should be centered in the caliper. If not, adjust by adding or subtracting shims (2) between the bracket and the upright. Always use the same amount of shims on each of the two mounting bolts. Once the caliper alignment is correct, remove the OEM bracket mounting bolts one at a time, apply red *Loctite*® 271 to the threads, and torque to OEM specifications.

- Remove the caliper center bridge pad retainer bolt, nut, and tube from the caliper. Insert the brake pads (12) into the caliper, with the friction material facing the rotor. Check that the top of the brake pad is flush with the outside diameter of the rotor. If not, adjust by adding or subtracting shims (11) between the caliper and the bracket. After the caliper pad height is set, reinstall the center bridge pad retainer tube, bolt, and lock nut. The lock nut should be snug without play in the bolt or tube. Be cautious not to over tighten. Torque the caliper lock nuts (8) to 30 ft-lb.

- Temporarily install the wheel and torque the lug nuts to the manufacturer's specification. Ensure that the wheel rotates freely without any interference.

- ***NOTE****: OEM rubber brake hoses generally cannot be adapted to Wilwood calipers. The caliper inlet fitting is a 1/8-27 NPT* (use PTFE tape on pipe threads of adapter fitting for proper sealing to caliper). Install Wilwood's stainless steel braided flexline hose kit (13), P/N 220-8338 included with this kit. **Carefully route hoses to prevent contact with moving suspension, brake or wheel components.** ***NOTE:*** *Wilwood hose kits are designed for use in many different vehicle applications and it is the installer's responsibility to properly route and ensure adequate clearance and retention for brake hose components.*

- ***NOTE:*** *Specified brake hose kits may not work with all Years, Makes and Models of vehicle that this brake kit is applicable to, due to possible OEM manufacturing changes during a production vehicle's life*. It is the installer's responsibility to ensure that all fittings and hoses are the correct size and length, to ensure proper sealing and that they will not be subject to crimping, strain and abrasion from vibration or interference with suspension components, brake rotor or wheel.

- In absence of specific instructions for brake line routing, the installer must use his best professional judgment on correct routing and retention of lines to ensure safe operation. Test vehicle brake system per the 'minimum test' procedure stated within this document before driving. After road testing, inspect for leaks and interference. Initially after install and testing, perform frequent checks of the vehicle brake system and lines before driving, to confirm that there is no undue wear or interference not apparent from the initial test. Afterwards, perform periodic inspections for function, leaks and wear in a interval relative to the usage of vehicle.

Assembly Instructions (Continued)

- Bleed the brake system, referring to the additional information and recommendations below for proper bleeding instructions. Check system for leaks after bleeding.

- Install the wheel and torque the lug nuts to manufacturer's specification.

- Bed-in the brake pads per the procedure on page 6.

Additional Information and Recommendations

- Fill and bleed the new system with Wilwood Hi-Temp° 570 grade fluid or higher. For severe braking or sustained high heat operation, use Wilwood EXP 600 Plus Racing Brake Fluid. Used fluid must be completely flushed from the system to prevent contamination. ***NOTE:*** *Silicone DOT 5 brake fluid is* ***NOT*** *recommended for racing or performance driving*.

- To properly bleed the brake system, begin with the caliper farthest from the master cylinder. Bleed the outboard bleed screw first, then the inboard. Repeat the procedure until all calipers in the system are bled, ending with the caliper closest to the master cylinder. ***NOTE:*** *When using a new master cylinder, it is important to bench bleed the master cylinder first.*

- Test the brake pedal. It should be firm, not spongy and stop at least 1 inch from the floor under heavy load.
  If the brake pedal is spongy, bleed the system again.

  If the brake pedal is initially firm, but then sinks to the floor, check the system for fluid leaks. Correct the leaks (if applicable) and then bleed the system again.

  If the brake pedal goes to the floor and continued bleeding of the system does not correct the problem, a master cylinder with increased capacity (larger bore diameter) may be required. Wilwood offers various lightweight master cylinders with large fluid displacement capacities.

- ***NOTE:*** *With the installation of after market disc brakes, the wheel track may change depending on the application.* Check your wheel offset before final assembly.

- If after following the instructions, you still have difficulty in assembling or bleeding your Wilwood disc brakes, consult your local chassis builder, or retailer where the kit was purchased for further assistance.

Brake Testing

WARNING • DO NOT DRIVE ON UNTESTED BRAKES
BRAKES MUST BE TESTED AFTER INSTALLATION OR MAINTENANCE
MINIMUM TEST PROCEDURE

- Make sure pedal is firm: Hold firm pressure on pedal for several minutes, it should remain in position without sinking. If pedal sinks toward floor, check system for fluid leaks. DO NOT drive vehicle if pedal does not stay firm or can be pushed to the floor with normal pressure.
- At very low speed (2-5 mph) apply brakes hard several times while turning steering from full left to full right, repeat several times. Remove the wheels and check that components are not touching, rubbing, or leaking.
- Carefully examine all brake components, brake lines, and fittings for leaks and interference.
- Make sure there is no interference with wheels or suspension components.
- Drive vehicle at low speed (15-20 mph) making moderate and hard stops. Brakes should feel normal and positive. Again check for leaks and interference.
- Always test vehicle in a safe place where there is no danger to (or from) other people or vehicles.
- Always wear seat belts and make use of all safety equipment.

Pad and Rotor Bedding

BEDDING STEPS FOR NEW PADS AND ROTORS – ALL COMPOUNDS

Once the brake system has been tested and determined safe to operate the vehicle, follow these steps for the bedding of all new pad materials and rotors. These procedures should only be performed on a race track, or other safe location where you can safely and legally obtain speeds up to 65 MPH, while also being able to rapidly decelerate.

- Begin with a series of light decelerations to gradually build some heat in the brakes. Use an on-and-off the pedal technique by applying the brakes for 3-5 seconds, and then allow them to fully release for a period roughly twice as long as the deceleration cycle. If you use a 5 count during the deceleration interval, use a 10 count during the release to allow the heat to sink into the pads and rotors.
- After several cycles of light stops to begin warming the brakes, proceed with a series of medium to firm deceleration stops to continue raising the temperature level in the brakes.
- Finish the bedding cycle with a series of 8-10 hard decelerations from 55-65 MPH down to 25 MPH while allowing a proportionate release and heat-sinking interval between each stop. The pads should now be providing positive and consistent response.
- If any amount of brake fade is observed during the bed-in cycle, immediately begin the cool down cycle.
- Drive at a moderate cruising speed, with the least amount of brake contact possible, until most of the heat has dissipated from the brakes. Avoid sitting stopped with the brake pedal depressed to hold the car in place during this time. Park the vehicle and allow the brakes to cool to ambient air temperature.

COMPETITION VEHICLES

- If your race car is equipped with brake cooling ducts, blocking them will allow the pads and rotors to warm up quicker and speed up the bedding process.
- Temperature indicating paint on the rotor and pad edges can provide valuable data regarding observed temperatures during the bedding process and subsequent on-track sessions. This information can be highly beneficial when evaluating pad compounds and cooling efficiencies.

Pad and Rotor Bedding (Continued)

POST-BEDDING INSPECTION – ALL VEHICLES

•After the bedding cycle, the rotors should exhibit a uniformly burnished finish across the entire contact face. Any surface irregularities that appear as smearing or splotching on the rotor faces can be an indication that the brakes were brought up to temperature too quickly during the bedding cycle. If the smear doesn't blend away after the next run-in cycle, or if chatter under braking results, sanding or resurfacing the rotors will be required to restore a uniform surface for pad contact.

PRE-RACE WARM UP

•Always make every effort to get heat into the brakes prior to each event. Use an on-and-off the pedal practice to warm the brakes during the trip to the staging zone, during parade laps before the flag drops, and every other opportunity in an effort to build heat in the pads and rotors. This will help to ensure best consistency, performance, and durability from your brakes.

DYNO BEDDED COMPETITION PADS AND ROTORS

•Getting track time for a proper pad and rotor bedding session can be difficult. Wilwood offers factory dyno-bedded pads and rotors on many of our popular competition pads and ***Spec 37*** GT series rotors. Dyno-bedded parts are ready to race on their first warm up cycle. This can save valuable time and effort when on-track time is either too valuable or not available at all, Dyno-bedding assures that your pads and rotors have been properly run-in and are ready to go. Contact your dealer or the factory for more information on Wilwood Dyno-Bedding services.

NOTE: *NEVER allow the contact surfaces of the pads or rotors to be contaminated with brake fluid. Always use a catch bottle with a hose to prevent fluid spill during all brake bleeding procedures.*

Connect with Wilwood

Wilwood Facebook Wilwood Instagram Wilwood Twitter Wilwood YouTube

Associated Components

PART NO.	DESCRIPTION
260-13706	Wilwood Residual Pressure Valve (2 lb for disc brakes)
260-13707	Wilwood Residual Pressure Valve (10 lb for drum brakes)
260-8419	Wilwood Proportioning Valve, Knob Style
260-8420	Wilwood Proportioning Valve, Lever Style
260-11179	Wilwood Combination Proportioning Valve with Brake Light Switch
290-0632	Wilwood Racing Brake Fluid (Hi-Temp° 570) (12 oz)
290-6209	Wilwood Racing Brake Fluid (EXP 600 Plus) (16.9 oz)
340-13831	Wilwood Floor Mount Brake Pedal (with balance bar)
340-13832	Wilwood Swing Mount Brake Pedal (with balance bar)
260-8555	Wilwood 1 inch Aluminum Tandem Chamber Master Cylinder
260-8556	Wilwood 1-1/8 inch Aluminum Tandem Chamber Master Cylinder
150-8855K	BP-10 Street Performance / Racing Brake Pads • Baseline Pad for Track Oriented Street Cars
150-12244K	BP-40 High Temperature Racing Brake Pads • Race Only Pad for Severe Duty Oval, Road Course, or Off-Road
220-7056	Stainless Steel Braided Flexline Kit, Universal, 14 Inch, Domestic, 3/8-24 IF
220-7699	Stainless Steel Braided Flexline Kit, Universal, 16 Inch, Domestic, 3/8-24 IF
220-8307	Stainless Steel Braided Flexline Kit, Universal, 18 Inch, Domestic, 3/8-24 IF
220-8338	Stainless Steel Braided Flexline Kit, 1988 - 1996 Corvette, Front